S09-ES X-Slide

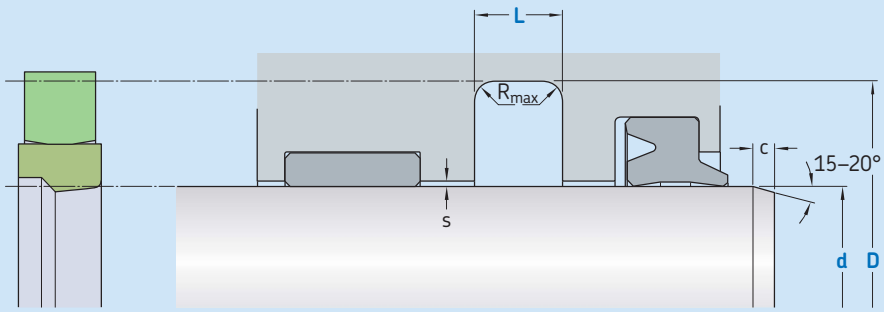

Ordering dimensions in **blue**

Surface roughness	R_{tmax}	R_a
Sliding surface	≤ 2,5 µm	0,1–0,5 µm
Bottom of groove	≤ 6,3 µm	≤ 1,6 µm
Groove face	≤ 15 µm	≤ 3 µm

Bearing area: 50–95% and a cutting depth of 0,5 R_z based on C_{ref} = 0%

Standard dimensions d f8 over	incl.	D H10	L + 0,2	R_{max}	c	**maximal radial extrusion gap** s* 100 bar	200 bar	400 bar	600 bar
mm						mm			
4	**50**	d + 10	5,0	0,2	4,0	0,50	0,40	0,30	0,20
50	**60**	d + 15	7,5	0,3	5,0	0,50	0,40	0,30	0,20
60	**200**	d + 20	10,0	0,4	6,0	0,70	0,50	0,40	0,20
200	**300**	d + 25	12,5	0,4	8,5	0,80	0,60	0,50	0,30
300	**530**	d + 30	15,0	0,8	10,0	0,90	0,70	0,60	0,30
530	**680**	d + 35	17,5	1,2	11,5	1,00	0,80	0,70	0,30
680	**1 500**	d + 40	20,0	1,2	13,0	1,10	0,90	0,80	0,40

* Extrusion gap values shown above are valid for a temperature of 80 °C, higher temperatures require lower values.

Ordering example

Profile	**X-Slide S09-ES**
d x D x L [mm]	**100 x 120 x 10**
Sealing material / Energizer	**X-ECOPUR / SKF Ecorubber-1**

S09-ES X-Slide

Operating parameters

Material Glide ring	Energizer	Temperature from	 to	Speed[1] max	Pressure[2] max
–		°C		m/s	bar *(MPa)*
X-ECOPUR XH-ECOPUR XS-ECOPUR G-ECOPUR 54D	SKF Ecorubber-1	–30	+100	5	600 *(60)*
	SKF Ecosil	–60	+110		
SKF Ecowear 1000	SKF Ecorubber-1	–30	+90		400 *(40)*
	SKF Ecosil	–60			

IMPORTANT NOTE: The stated operating conditions represent general indications. It is recommended not to use all maximum values simultaneously.
[1] Surface speed limit values are valid only in the presence of a lubrication film.
[2] Pressure ratings depend on the size of the extrusion gap.

® ECOPUR and SKF are registered trademarks of the SKF Group

© SKF Group 2012
The contents of this publication are the copyright of the publisher and may not be reproduced (even extracts) unless prior written permission is granted. Every care has been taken to ensure the accuracy of the information contained in this publication but no liability can be accepted for any loss or damage whether direct, indirect or consequential arising out of the use of the information contained herein.

PUB SE/P8 11921 EN · March 2012

S09-ES F-Slide

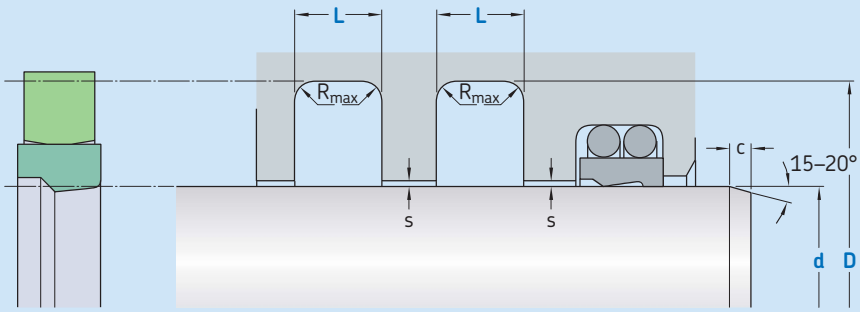

Ordering dimensions in **blue**

Surface roughness	R_{tmax}	R_a
Sliding surface	≤ 2 µm	0,05–0,3 µm
Bottom of groove	≤ 6,3 µm	≤ 1,6 µm
Groove face	≤ 15 µm	≤ 3 µm

Bearing area: 50–95% and a cutting depth of 0,5 R_z based on C_{ref} = 0%

Standard dimensions						**maximal radial extrusion gap**			
d f8		D H10	L + 0,2	R_{max}	c	s*			
over	incl.					100 bar	200 bar	400 bar	600 bar
mm						mm			
4	**50**	d + 10	5,0	0,2	4,0	0,40	0,30	0,20	0,10
50	**60**	d + 15	7,5	0,3	5,0	0,50	0,30	0,20	0,10
60	**200**	d + 20	10,0	0,4	6,0	0,60	0,40	0,25	0,15
200	**300**	d + 25	12,5	0,4	8,5	0,60	0,40	0,25	0,15
300	**530**	d + 30	15,0	0,8	10,0	0,70	0,50	0,30	0,20
530	**680**	d + 35	17,5	1,2	11,5	0,80	0,60	0,50	0,20
680	**1 500**	d + 40	20,0	1,2	13,0	1,00	0,70	0,60	0,30

* Extrusion gap values shown above are valid for a temperature of 80 °C, higher temperatures require lower values.

Ordering example

Profile	**F-Slide S09-ES**
d x D x L [mm]	**100 x 120 x 10**
Sealing material / Energizer	**SKF Ecoflon 3F / SKF Ecorubber-1**

S09-ES F-Slide

Operating parameters

Material Glide ring	Energizer	Temperature from	Temperature to	Speed[1] max	Pressure[2] max
–		°C		m/s	bar *(MPa)*
SKF Ecoflon 2 SKF Ecoflon 3 SKF Ecoflon 3F SKF Ecoflon 4	SKF Ecorubber-1	–30	+100	10	600 *(60)*
	SKF Ecorubber-2	–20	+200		

IMPORTANT NOTE: The stated operating conditions represent general indications. It is recommended not to use all maximum values simultaneously.
[1] Surface speed limit values are valid only in the presence of a lubrication film.
[2] Pressure ratings depend on the size of the extrusion gap.

® ECOPUR and SKF are registered trademarks of the SKF Group

© SKF Group 2012
The contents of this publication are the copyright of the publisher and may not be reproduced (even extracts) unless prior written permission is granted. Every care has been taken to ensure the accuracy of the information contained in this publication but no liability can be accepted for any loss or damage whether direct, indirect or consequential arising out of the use of the information contained herein.

PUB SE/P8 11920 EN · March 2012