S09-D F-Slide

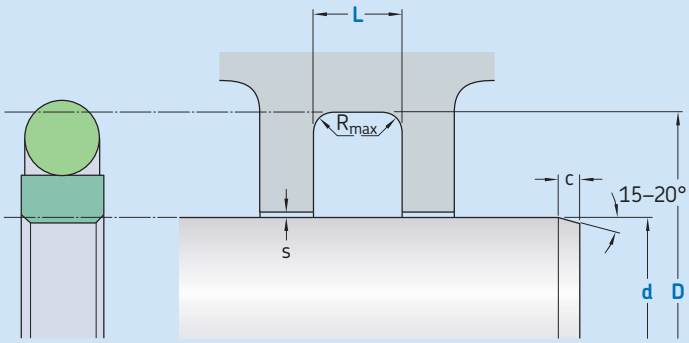

Ordering dimensions in **blue**

Surface roughness	R_{tmax}	R_a
Sliding surface	≤ 2 µm	0,05–0,3 µm
Bottom of groove	≤ 6,3 µm	≤ 1,6 µm
Groove face	≤ 15 µm	≤ 3 µm

Bearing area: 50–95% and a cutting depth of 0,5 R_z based on C_{ref} = 0%

Standard dimensions							**maximal radial extrusion gap**			
d f8		D H10	L + 0,2	R_{max}	c	OD	s*			
over	incl.						100 bar	200 bar	400 bar	600 bar
mm							mm			
4	**8**	d + 4,9	2,2	0,4	2,5	1,78	0,30	0,20	0,15	0,05
8	**19**	d + 7,3	3,2	0,6	3,5	2,62	0,40	0,25	0,15	0,05
19	**38**	d + 10,7	4,2	1,0	4,5	3,53	0,40	0,25	0,20	0,10
38	**200**	d + 15,1	6,3	1,3	5,0	5,33	0,50	0,30	0,20	0,10
200	**256**	d + 20,5	8,1	1,8	6,0	7,00	0,60	0,35	0,25	0,15
256	**650**	d + 24,0	8,1	1,8	8,0	7,00	0,60	0,35	0,25	0,15
650	**1 000**	d + 27,3	9,5	2,5	10,0	8,40	0,70	0,50	0,30	0,20
1 000	**2 000**	d + 38,0	13,8	3,0	12,0	12,00	1,00	0,70	0,60	0,30

* Extrusion gap values shown above are valid for a temperature of 80 °C, higher temperatures require lower values.

Ordering example

Profile	**F-Slide S09-D**
d x D x L [mm]	**100 x 115,1 x 6,3**
Sealing material / Energizer	**SKF Ecoflon 3F / NBR70**

S09-D F-Slide

Operating parameters

Material Glide ring	Energizer	Temperature from	 to	Speed[1] max	Pressure[2] max
–		°C		m/s	bar *(MPa)*
SKF Ecoflon 2 SKF Ecoflon 3 SKF Ecoflon 3F SKF Ecoflon 4	NBR70	–30	+100	10	600 *(60)*
	FPM70	–20	+200		

IMPORTANT NOTE: The stated operating conditions represent general indications. It is recommended not to use all maximum values simultaneously.
[1] Surface speed limit values are valid only in the presence of a lubrication film.
[2] Pressure ratings depend on the size of the extrusion gap.

PUB SE/P8 11914 EN · March 2012

S09-D X-Slide

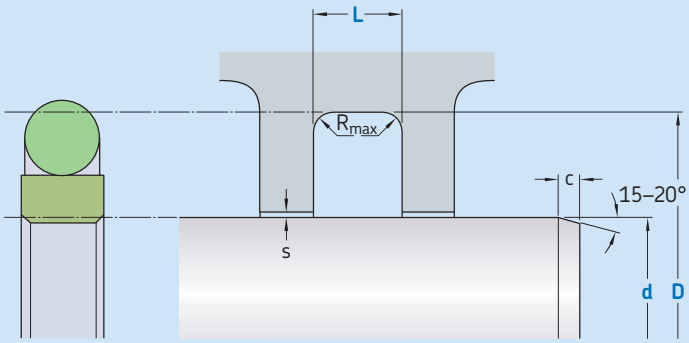

Ordering dimensions in **blue**

Surface roughness	R_{tmax}	R_a
Sliding surface	≤ 2,5 µm	0,1–0,5 µm
Bottom of groove	≤ 6,3 µm	≤ 1,6 µm
Groove face	≤ 15 µm	≤ 3 µm

Bearing area: 50–95% and a cutting depth of 0,5 R_z based on C_{ref} = 0%

Standard dimensions d f8 over	incl.	D H10	L + 0,2	R_{max}	c	OD	**maximal radial extrusion gap** s* 100 bar	200 bar	400 bar	600 bar
mm							mm			
4	**8**	d + 4,9	2,2	0,4	2,5	1,78	0,30	0,30	0,20	0,10
8	**19**	d + 7,3	3,2	0,6	3,5	2,62	0,40	0,30	0,20	0,10
19	**38**	d + 10,7	4,2	1,0	4,5	3,53	0,50	0,40	0,30	0,20
38	**200**	d + 15,1	6,3	1,3	5,0	5,33	0,50	0,40	0,30	0,20
200	**256**	d + 20,5	8,1	1,8	6,0	7,00	0,70	0,50	0,40	0,20
256	**650**	d + 24,0	8,1	1,8	8,0	7,00	0,70	0,50	0,40	0,20
650	**1 000**	d + 27,3	9,5	2,5	10,0	8,40	0,80	0,70	0,50	0,30
1 000	**3 000**	d + 38,0	13,8	3,0	12,0	12,00	1,10	0,80	0,70	0,40

* Extrusion gap values shown above are valid for a temperature of 80 °C, higher temperatures require lower values.

Ordering example

Profile	**X-Slide S09-D**
d x D x L [mm]	**100 x 115,1 x 6,3**
Sealing material / Energizer	**X-ECOPUR / NBR70**

S09-D X-Slide

Operating parameters

Material Glide ring	Energizer	Temperature from	 to	Speed[1] max	Pressure[2] max
–		°C		m/s	bar *(MPa)*
X-ECOPUR XH-ECOPUR XS-ECOPUR G-ECOPUR 54D	NBR70	–30	+100	5	600 *(60)*
	MVQ70	–55	+110		
SKF Ecowear 1000	NBR70	–30	+90		400 *(40)*
	MVQ70	–55			

IMPORTANT NOTE: The stated operating conditions represent general indications. It is recommended not to use all maximum values simultaneously.
[1] Surface speed limit values are valid only in the presence of a lubrication film.
[2] Pressure ratings depend on the size of the extrusion gap.

PUB SE/P8 11915 EN · March 2012